Tuned Pipes: End-to-end Throughput and Delay Guarantees for USB Devices

Ahmad Golchin, Zhuoqun Cheng and Richard West
Boston University

Motivations

- Cyber-physical applications
- Sensor-actuator loops
- Ubiquity of USB
- Need for predictable I/O communication
  - Between device & application tasks
- Avoid manually fine-tuning system parameters for control & data flow

Contributions

- Tuned Pipes system framework
  - Guarantees end-to-end latency and throughput requirements between USB devices and host tasks
- A host controller driver with early demultiplexing
  - Allows USB bottom-half handler to run with the right priority and in a timely manner as opposed to Linux
- Extended our previous USB bus scheduling algorithm to comply with xHCI

Quest RTOS

- Real-time OS supporting multicore x86 platforms
  - Intel's Aero, UP, UP2, Skull Canyon, Edison, Minnowmax,...
- Dual-mode Kernel
- Unified task and I/O (bottom-half) scheduling through time-budgeted virtual CPUs (VCPUs)
  - Tasks scheduling: Main VCPUs
  - Interrupt bottom-half scheduling: I/O VCPUs
- More info: www.questos.org

VCPU Scheduling in Quest RTOS

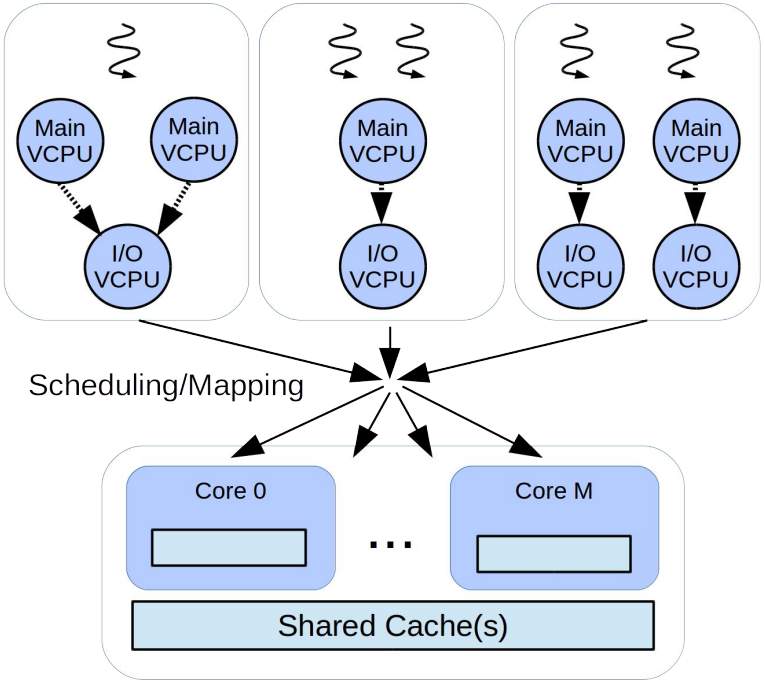

- Main VCPUs
  - Sporadic Server + RMS
  - Guarantees budget C every period T for tasks
- I/O VCPUs
  - PIBS
  - BW limited by Utilization factor Uj
  - Inherits T from the task
- Temporal isolation condition:

$$\sum_{i=0}^{n-1} \frac{C_i}{T_i} + \sum_{j=0}^{m-1} (2 - U_j).U_j \leq n(\sqrt[n]{2} - 1)$$

Tuned Pipes

- Host-to-device communication channel
- Throughput and delay bounds (QoS)
- Temporal isolation
- Endpoint-pipe: 1:N registered by drivers

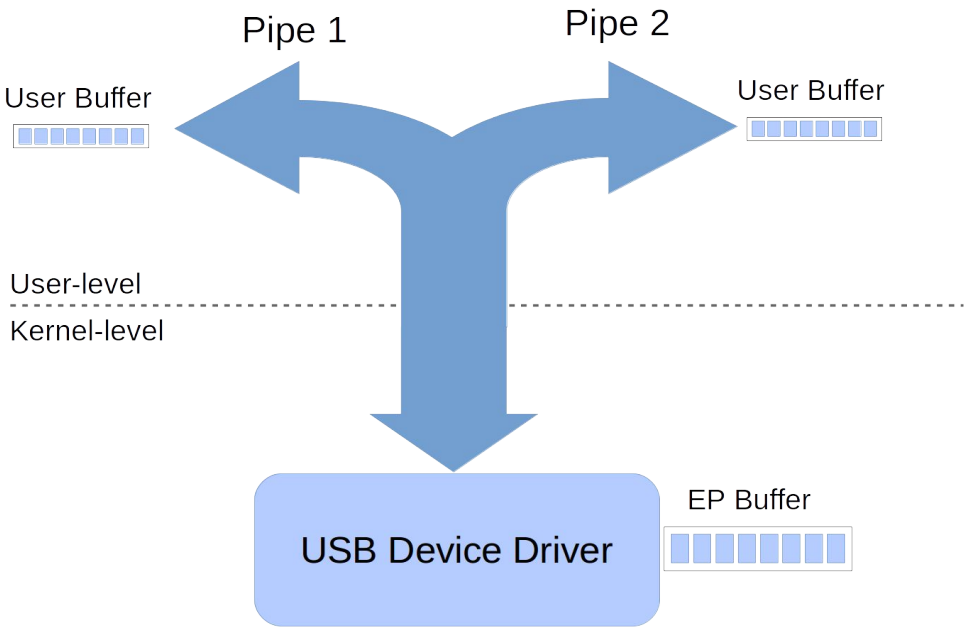

Tuned Pipes - User-level API

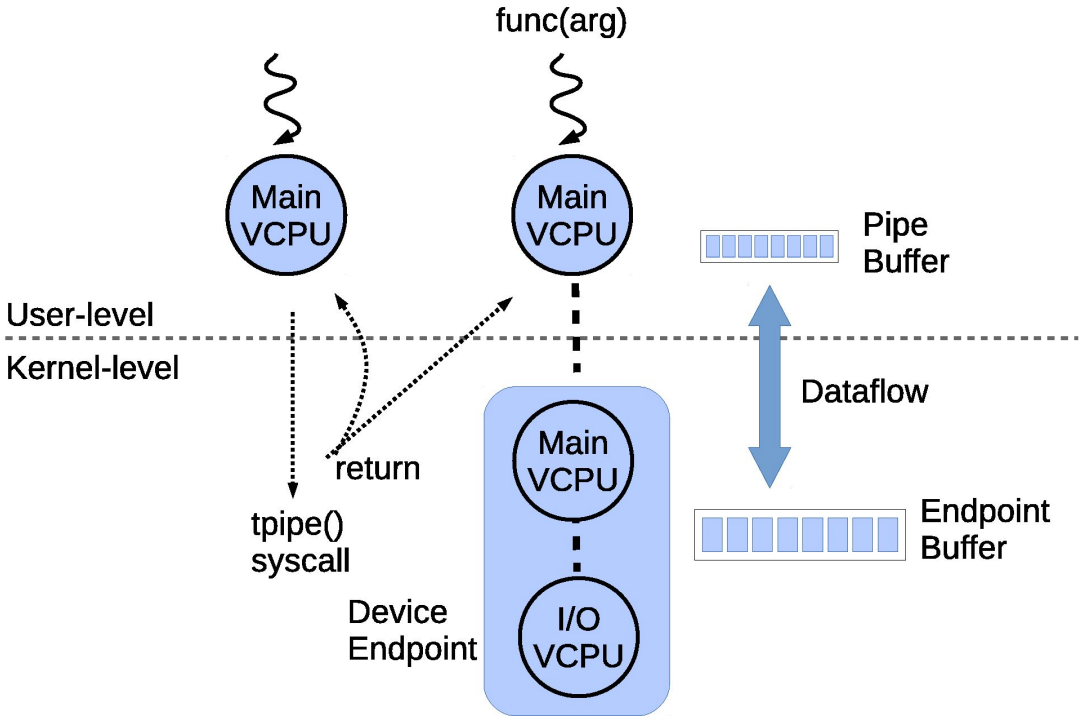

Tuned Pipes - User-level API

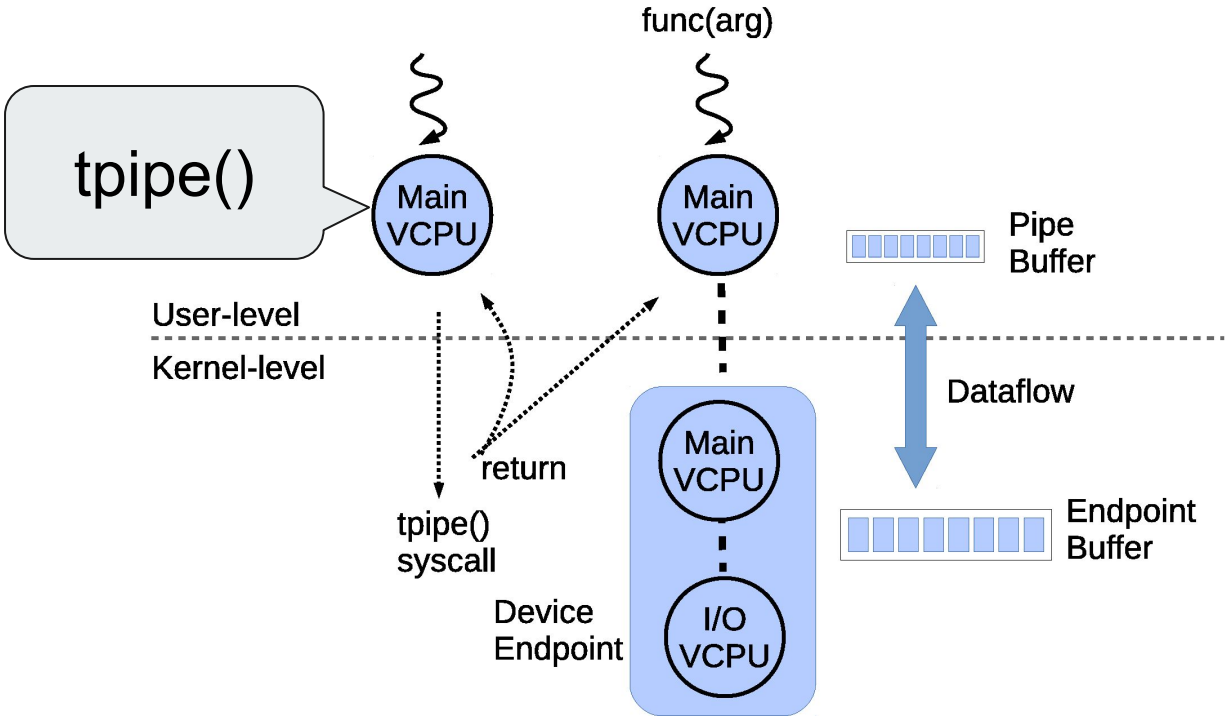

Tuned Pipes - User-level API

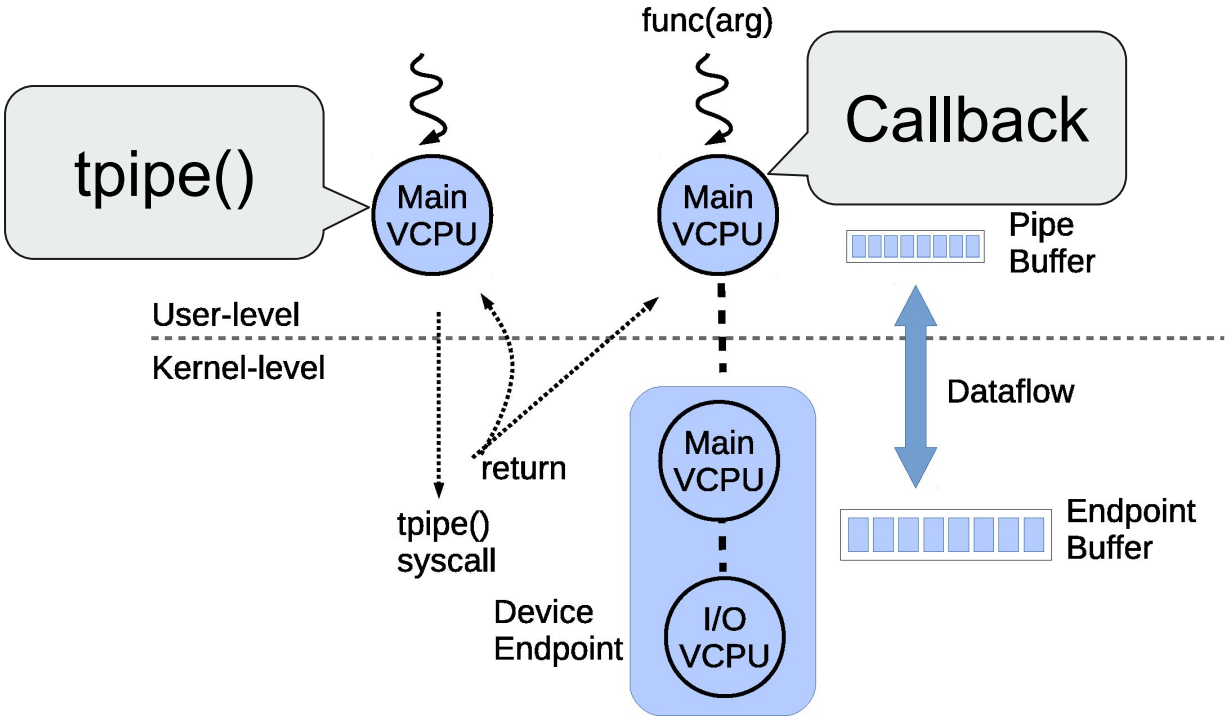

Tuned Pipes - User-level API

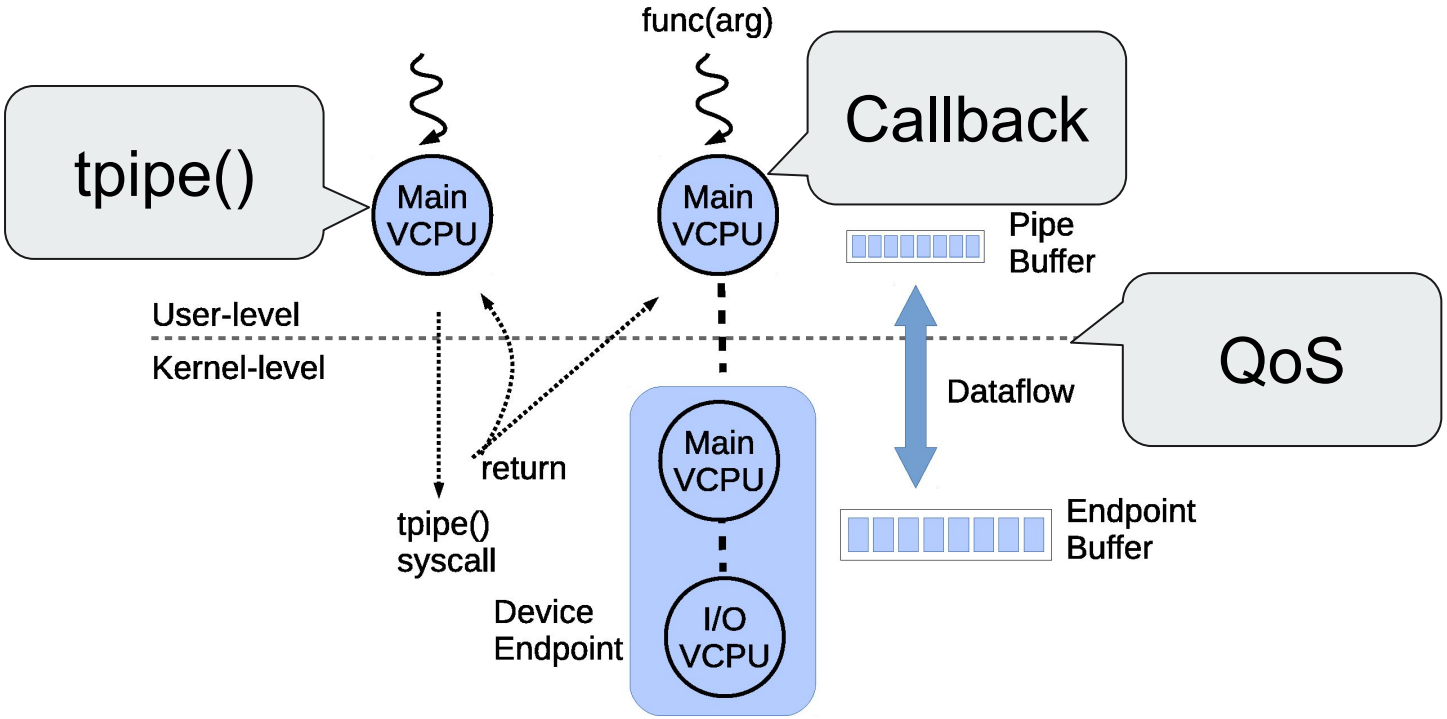

Tuned Pipes - User-level API

QoS Specification:

- Execution Time (C)
- Throughput (λ)
- IO Buffer Size (B)

Tuned Pipes - User-level API

QoS Specification:

- Execution Time (C)
- Throughput (λ)
- IO Buffer Size (B)

Example:

tput = 500Kbps
IObufsize = 128 bytes
texec_time = 1 ms

Tuned Pipes - User-level API

QoS Specification:

- Execution Time (C)
- Throughput (λ)
- IO Buffer Size (B)

Example:

tput = 500Kbps
IObufsize = 128 bytes
texec_time = 1 ms

Little's law: $B = \lambda T$

Tuned Pipes - User-level API

QoS Specification:

- Execution Time (C)
- Throughput (λ)
- IO Buffer Size (B)

Example:

tput = 500Kbps
IObufsize = 128 bytes
texec_time = 1 ms

Little's law: $B = \lambda T$

Main VCPU Parameters
C = 1ms
T = 128*8 / 512000 = 2ms

Tuned Pipes - Kernel API

Endpoint:

- Endpoint Attributes
- IOVCPU & sched param
- MainVCPU & sched param

Endpoint Attributes:

- Max # of Channels
- Max Throughput
- Min Latency
- Min/Max EP Buffer Size
- Min/Max Packet Size

Tuned Pipes - Kernel API

Example

- 4 channels at 500Kbps
- 1 channel at 250Kbps
- max_tput = 2.25Mbps
- ebuf_sz = 4KB
- Driver applies Little's law to set proper budget and period for it's I/O thread:
- E.g.: C = 2ms, T= 14ms

End-to-end Rx Data Path

4 Delay contributors

- User thread
- CAN Driver thread
- DMA of data
- USB Bottom-half

Question:
How to enforce QoS?

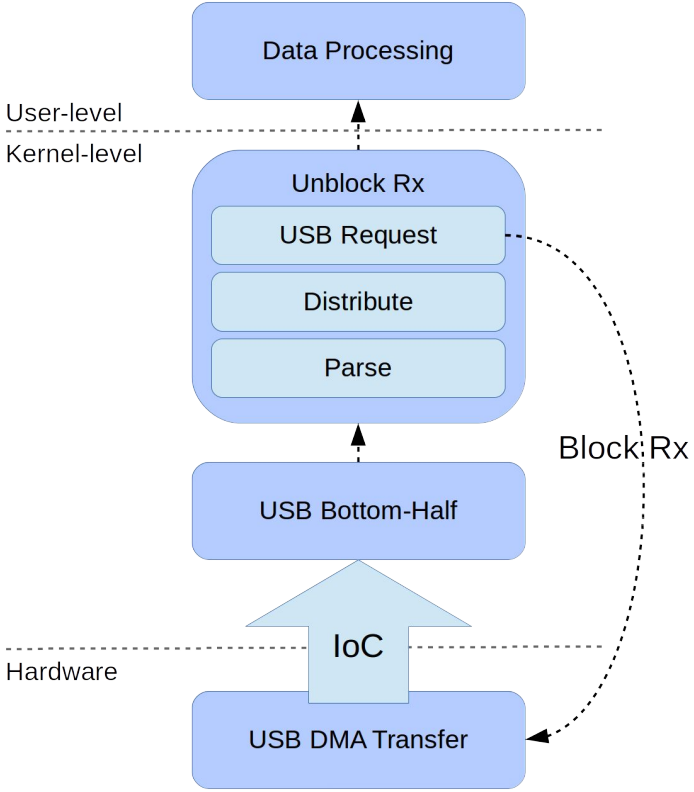

End-to-end Rx Data Path

4 Delay contributors

- User thread
- CAN Driver thread
- DMA of data
- USB Bottom-half

Question:
How to enforce QoS?

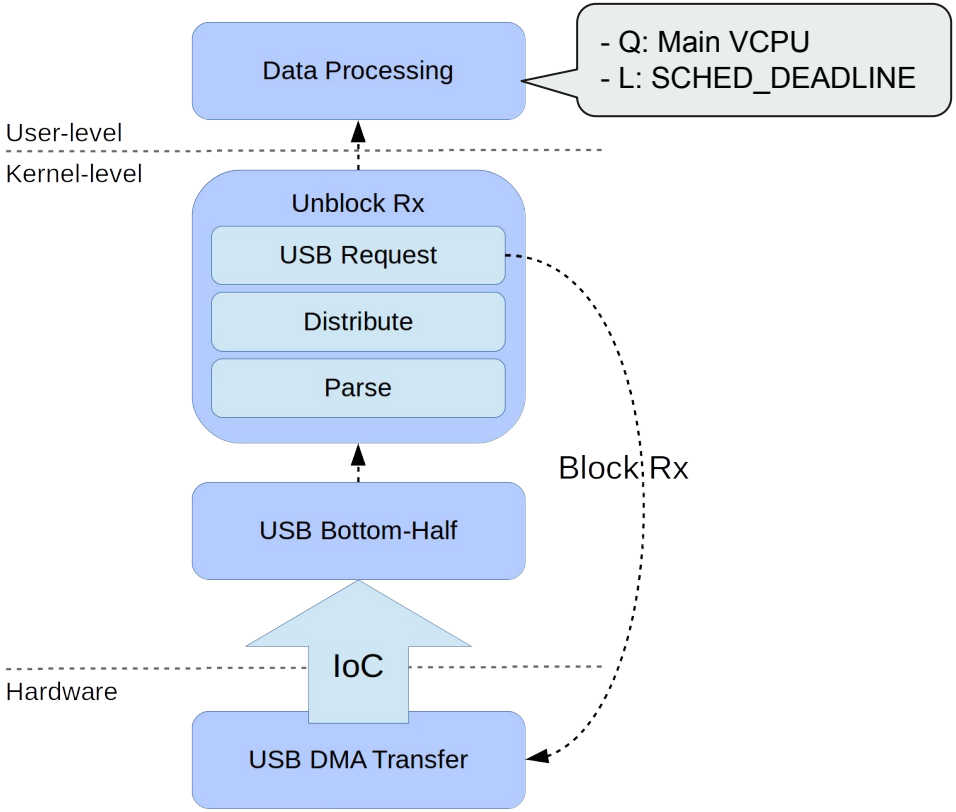

End-to-end Rx Data Path

4 Delay contributors

- User thread
- CAN Driver thread
- DMA of data
- USB Bottom-half

Question:
How to enforce QoS?

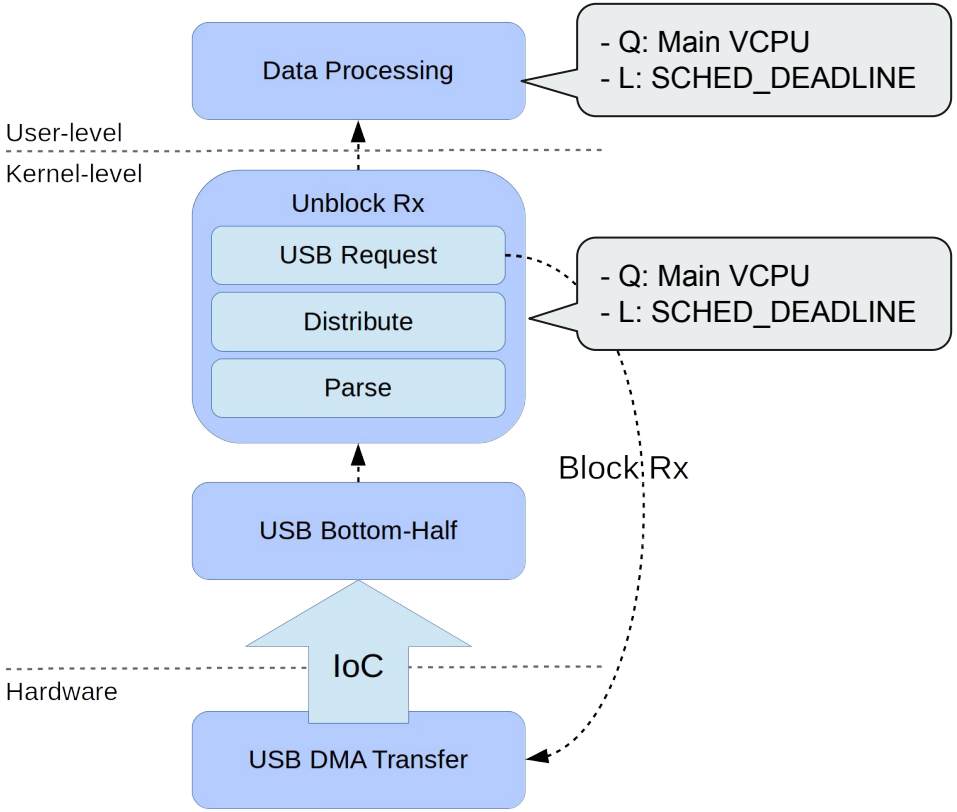

End-to-end Rx Data Path

4 Delay contributors

- User thread
- CAN Driver thread
- DMA of data
- USB Bottom-half

Question:
How to enforce QoS?

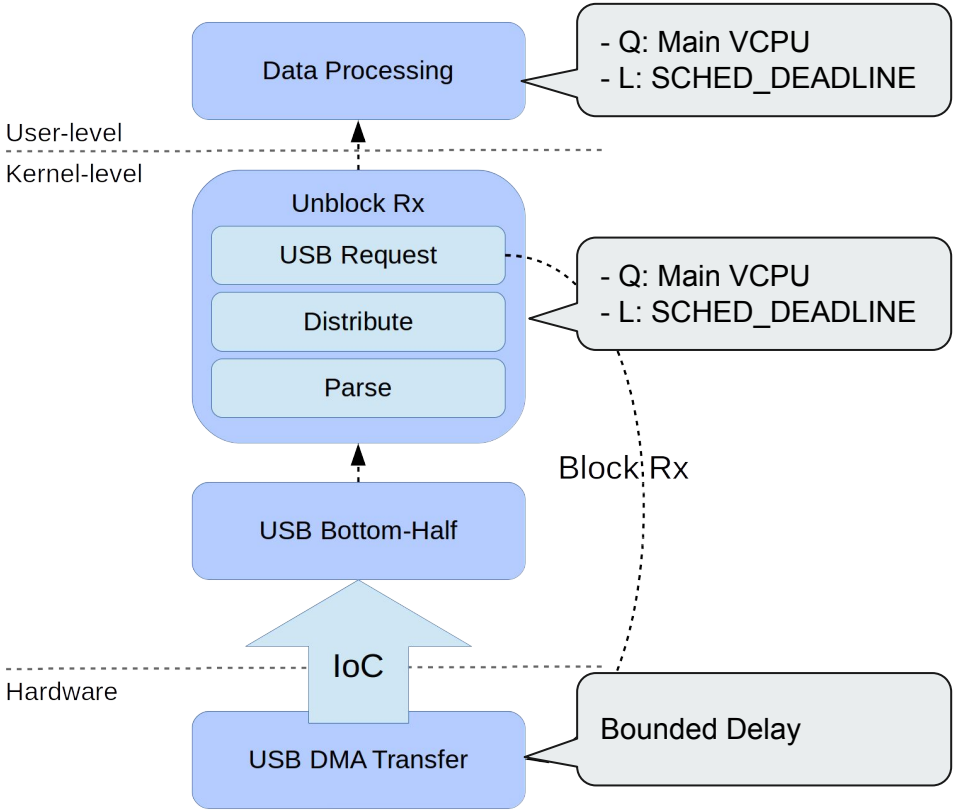

End-to-end Rx Data Path

4 Delay contributors

- User thread
- CAN Driver thread
- DMA of data
- USB Bottom-half

Question:
How to enforce QoS?

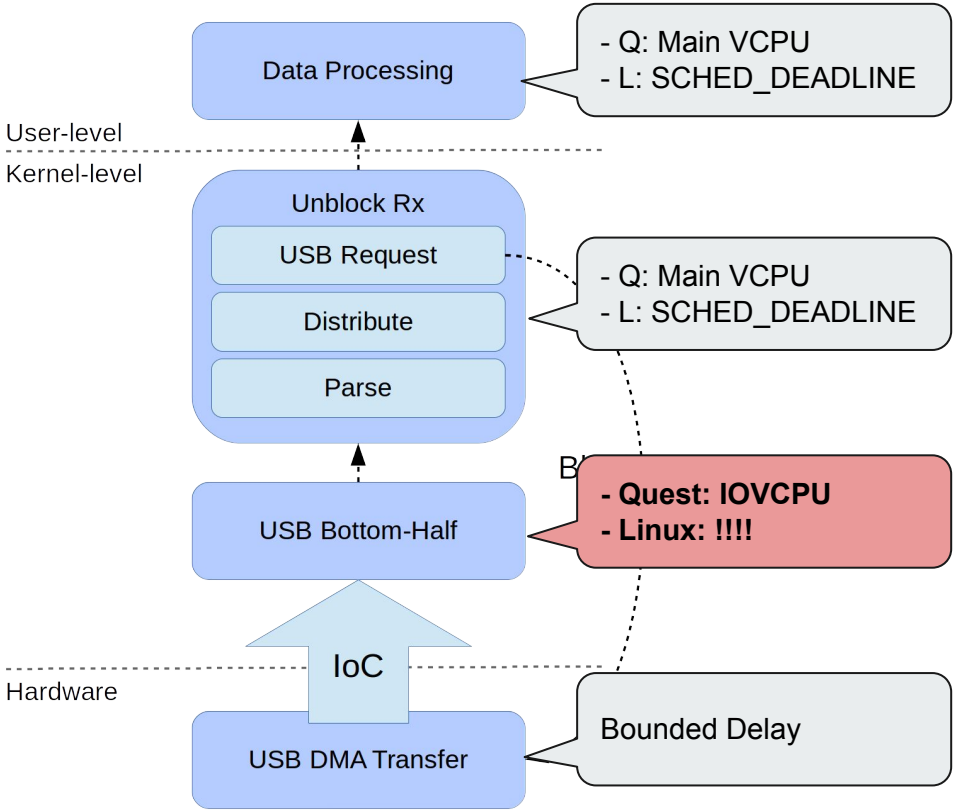

End-to-end Data Path - Challenges

Challenges with Linux:

- USB BUS Scheduling
- **USB Bottom-half handler priority mismatch!**

What currently happens:

- Soft-IRQs

  Highest Priority until MAX_SOFTIRQ_RESTART→ Low Priority

- Threaded-IRQs (e.g. PREEMPT_RT)

  Fixed SCHED_FIFO Priority (Default: 50)

Experimental Environment

CAN Interface

- Kvaser USBcan Pro 5xHS
- 5 channels: up to 1Mbps w/ 4KB buffer
- 2 ECUs: each exposing 2 channels
- 1 Arduino UNO + CAN-BUS Shield

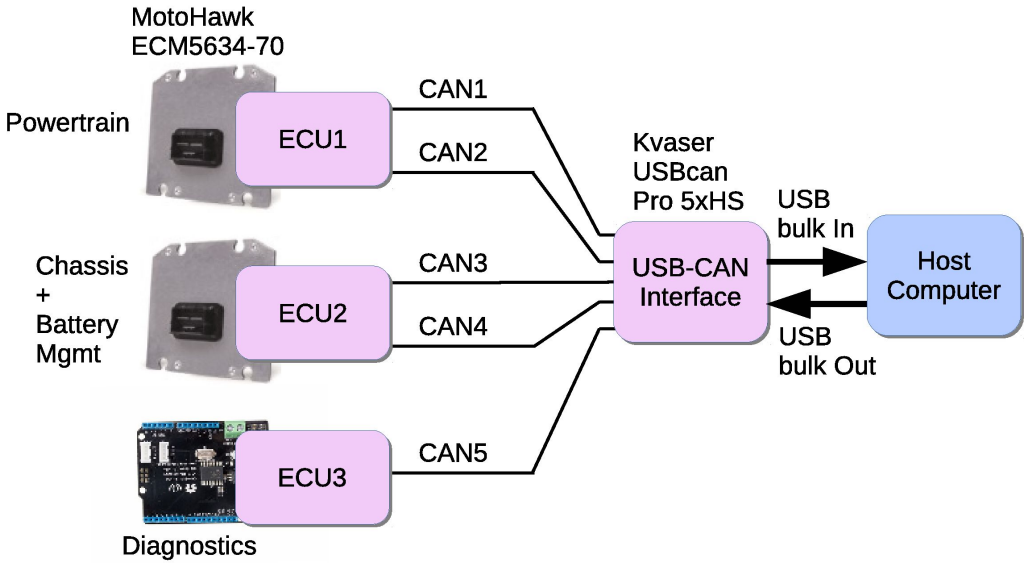

Experimental Environment

UPSquared SBC

- Dual-core Celeron N3350 @ 1.1 GHz
- xHCI 1.1 Interface

Quest RTOS

- VCPU Scheduling

Ubilinux (PREEMPT_RT)

- SCHED_DEADLINE

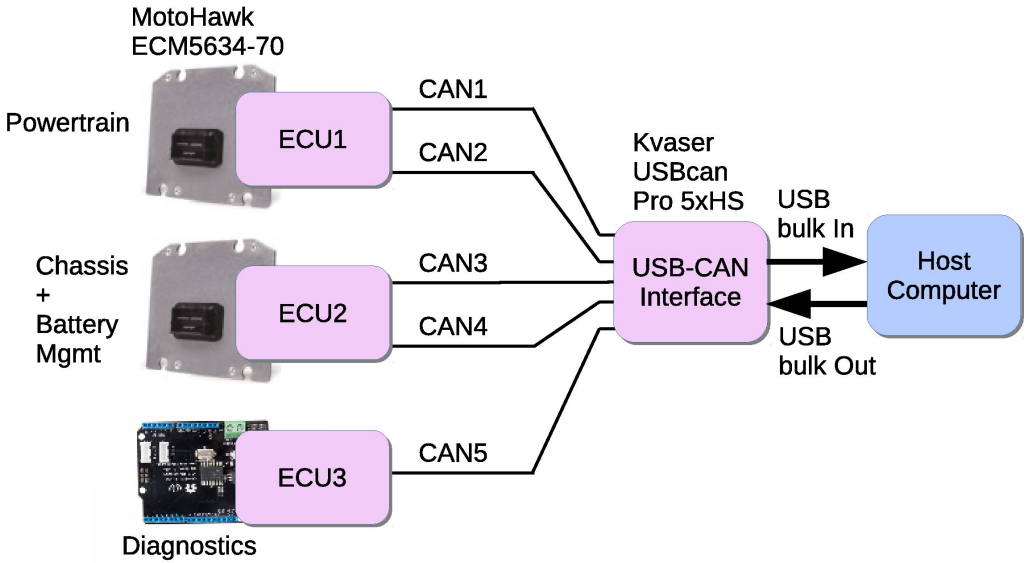

Test 1 - Endpoint Guarantees

Objective: Receiving frames without:

- Loss of CAN packets
- Intervening with other tasks of higher priority

Generated data traffic:

Bus	**CAN1**	**CAN2**	**CAN3**	**CAN4**	**CAN5**
Bandwidth (bps)	500K	250K	500K	500K	500K
Throughput %	10	20	30	40	69

Test 1 - Endpoint Guarantees

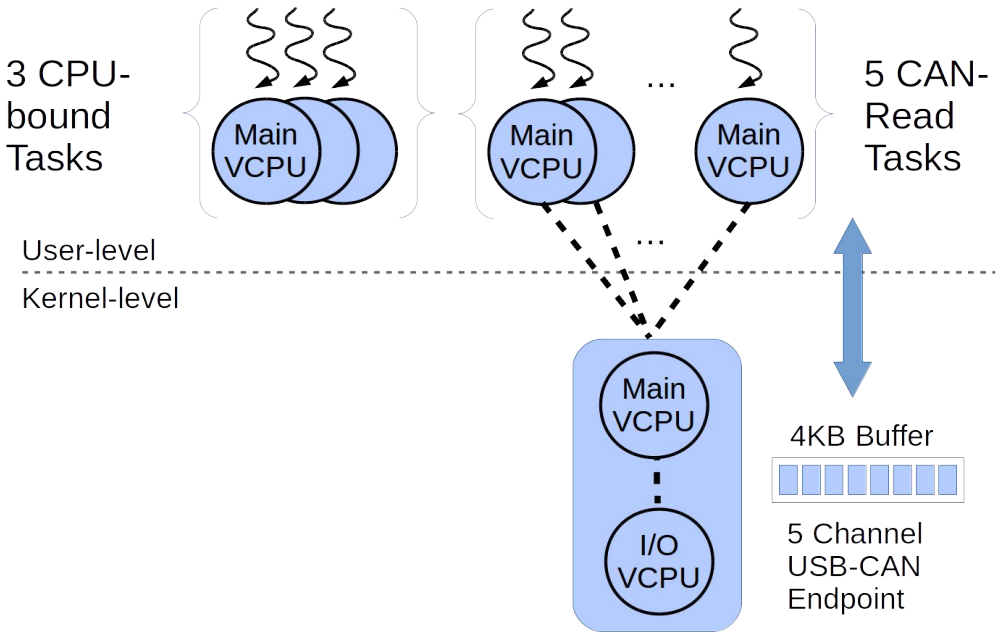

Test 1 - Endpoint Guarantees

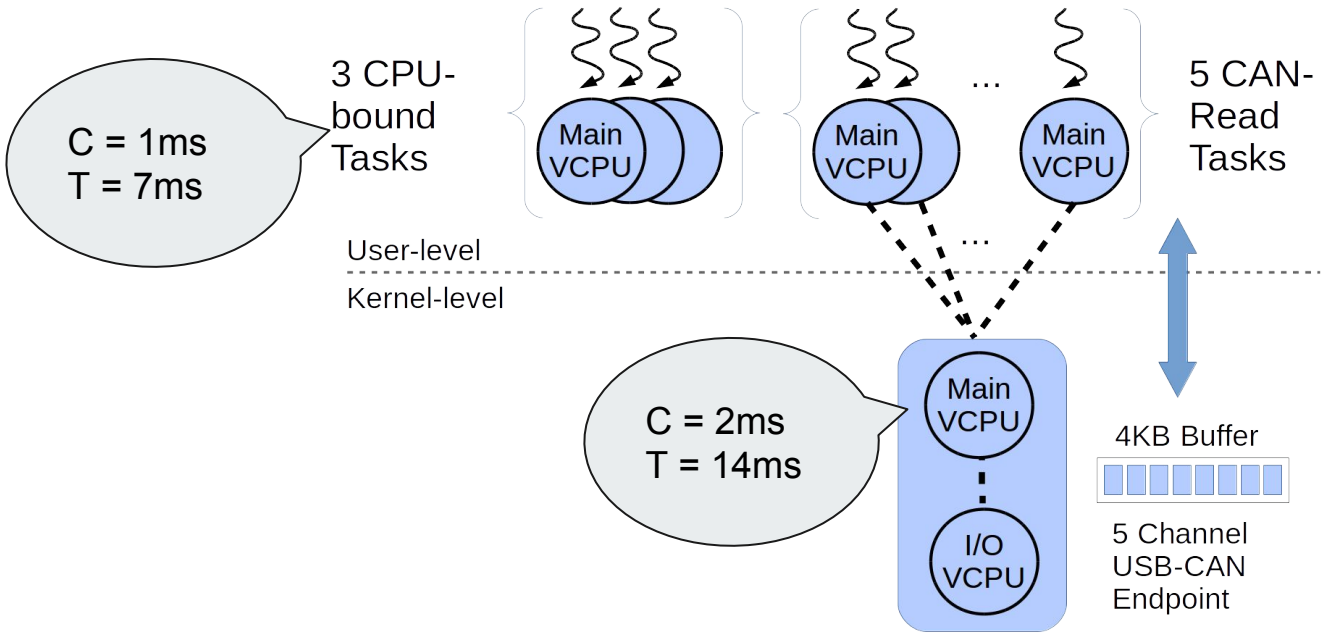

Test 1 - Endpoint Guarantees

Observations:

- Quest:
  - **No buffer overrun**
  - **Negligible interference**
- Linux:
  - **230 overruns over 30 seconds**
  - **405 overruns over 60 seconds**
  - **More interference**

Test 2 - End-to-end Guarantees - Rx

Objective: Guaranteeing throughput using tuned pipes

- 5 Tuned pipes receiving data
- CAN 4 & 5 Throughput: 2730 to 2752 fps
- QoS: tput=2752, IObufsz=128, exec_time=2ms

Bus	**CAN1**	**CAN2**	**CAN3**	**CAN4**	**CAN5**
Bandwidth (bps)	500K	250K	500K	500K	500K
Throughput %	10	20	30	**69**	**69**

Test 2 - End-to-end Guarantees - Rx

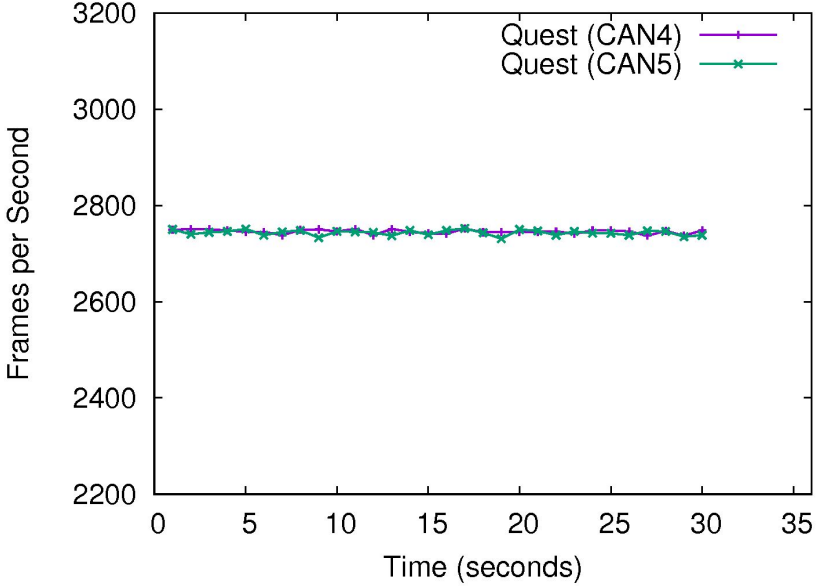

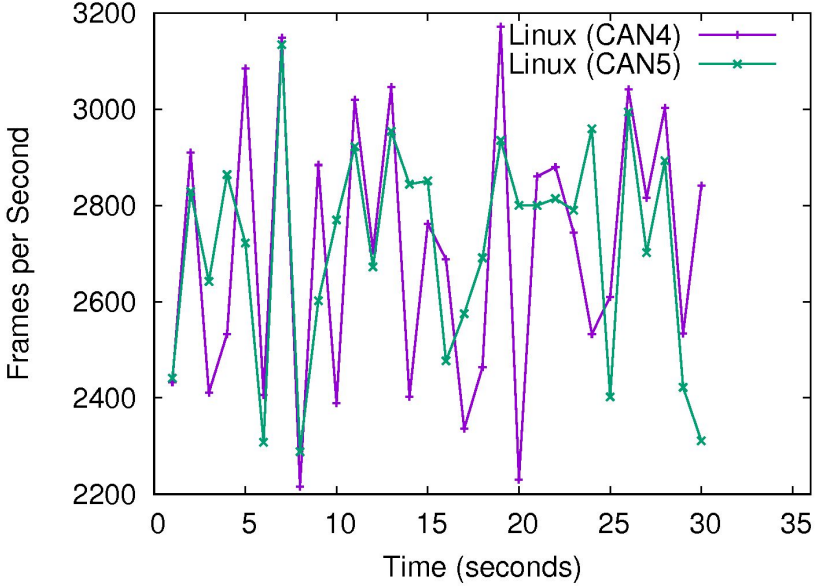

Test 2 - End-to-end Guarantees - Rx

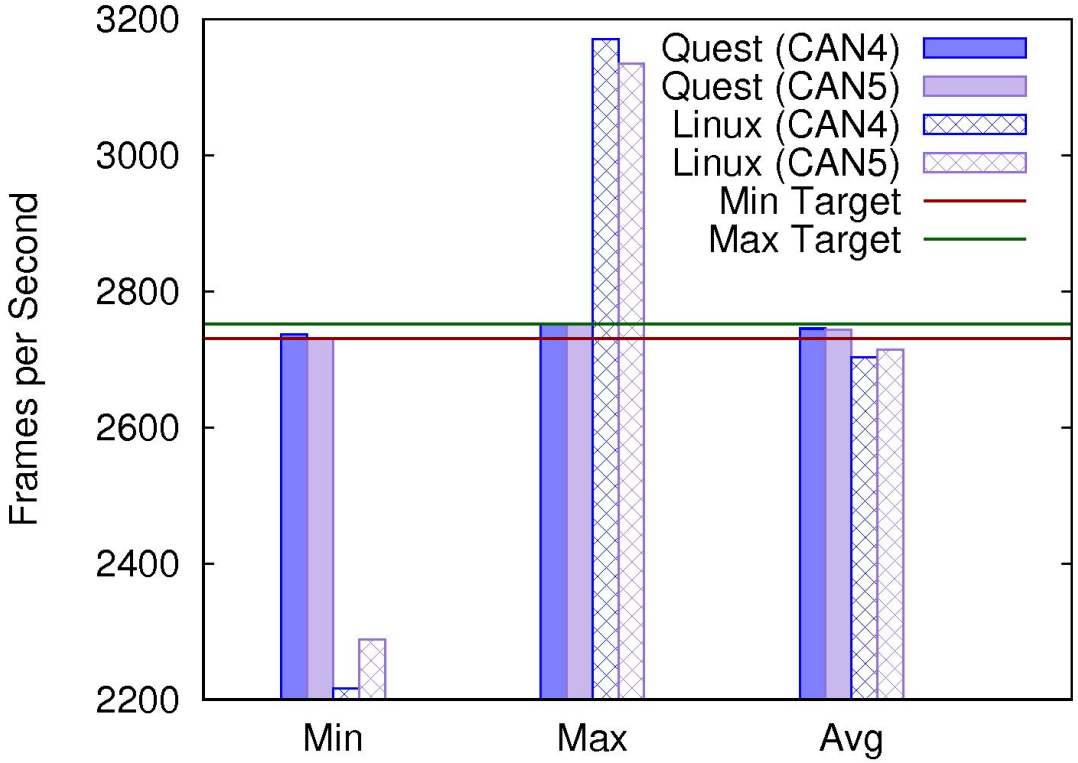

Conclusions

- Tuned pipes abstraction
- Auto-tuning of system parameters
- Guarantee of throughput and delay constraints
  - Not solved with SCHED_DEADLINE in Linux
- Early demultiplexing of entities waiting for INT
- Handling BH with the RIGHT priority (IOVCPU)
  - Not solved with PREEMPT_RT Linux patch

Thank you!

Comments or Questions ?

Test 3 - End-to-end Guarantees - Tx

Objective: Guaranteeing throughput using tuned pipes

Similar to the previous test, except:

- CAN 4 & 5 Receiving data every 325.4 to 327.5 uS
- Arrival rate: 3053 to 3073
- QoS: tput=3073, IObufsz=128, exec_time=2ms

Test 3 - End-to-end Guarantees - Tx

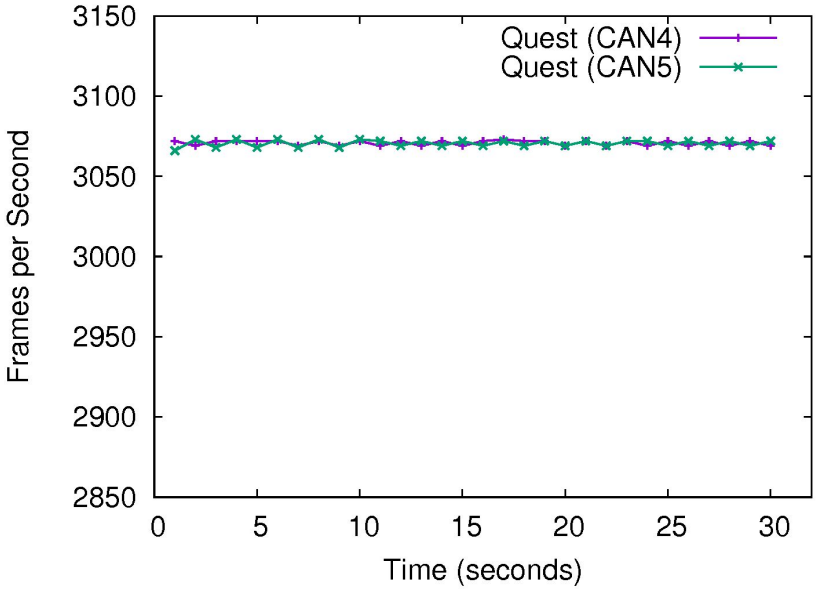

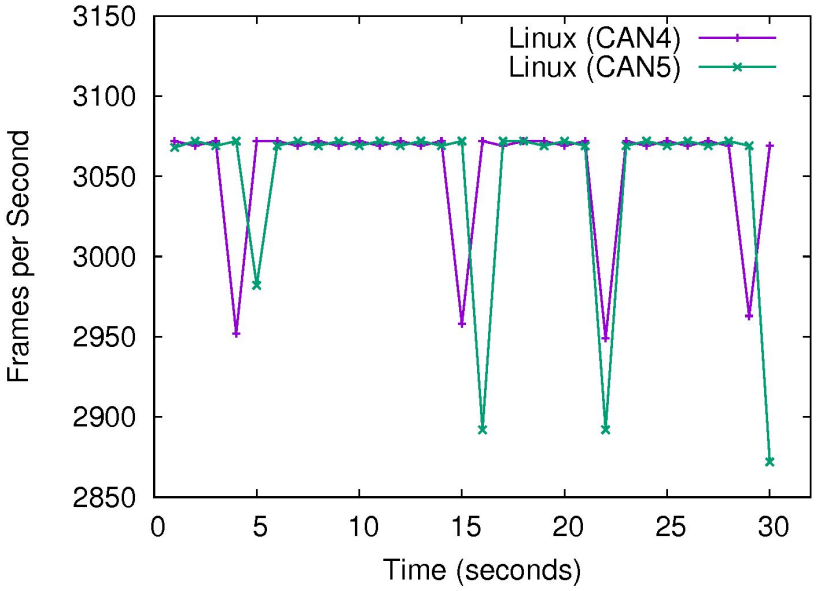

Test 3 - End-to-end Guarantees - Tx